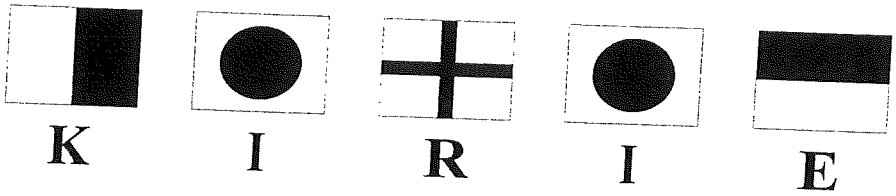

OWNER'S MANUAL

FEELING 30

This manual is specifically attributed to FEELING 30 N° FR – FEE 30_____ This document should always remain on board.

This document includes 38 pages, numbered from page 1 to page 38 plus 18 pages of appendices numbered from page A1 to A18.

Edited 25/01/01

INTRODUCTION

KIRIÉ is pleased to present you with this manual that will help you to get to know your boat better.

This manual is designed to help you get the maximum pleasure from your boat in total safety. It contains details of the boat, the equipment supplied and fitted, the installations and instructions on its use and maintenance. Read it through carefully and familiarise yourself with your boat before you set sail.

If this is your first boat or if you are changing to an unfamiliar type of boat, please ensure, for your comfort and safety, that you have experience of handling and using it before taking over command. Your dealer, your national sailing association or your local sailing club will be very pleased to advise you on sailing schools and skilled instructors in your area.

PLEASE KEEP THIS MANUAL IN A SAFE PLACE AND PASS IT ON TO THE NEW OWNER IF YOU SHOULD SELL THE YACHT.

The information provided in this manual is a guideline only and is not contractual.

CONTENTS

Société Nouvelle KIRIE – BP 1839 Le Châteaud'Olonne - 85118 Les SABLES D'OLONNE

TABLE DES ANNEXES

Your KIRIE dealer

NAME:
ADDRESS :

TEL:
FAX:

This is your local representative who can provide all the necessary assistance and answer all your questions. He can also guide and advise you on the technical checks for commissioning your boat and on how to maintain it.

As soon as you receive your owner's manual date and sign the enclosed receipt and return it within 8 days to**KIRIE**, in order to be covered by our warranty. The warranty is not valid unless the receipt is returned to the manufacturer on time.

For the conditions of the warranty please see page 38.

Société Nouvelle KIRIE – BP 1839 Le Châteaud'Olonne - 85118 Les SABLES D'OLONNE

1. TECHNICAL CHARACTERISTICS

Design category : B	Certificate DI N° AFEE 000030V
Length OA:	9.10 m
Length of hull:	8.80 m
Waterline length:	7.90 m
Maximum beam:	3.08 m
Light draught (fixed keel) :	1.72 m
Light draught (lifting keel) :	0.70 / 1.80 m
Air draught	12.70 m
Weight of ballast (fixed keel) :	1 000 kg
Weight of ballast (board + ballast) :	1 200 kg
Light displacement (f. keel/l. keel) :	3 100 / 3 350 kg
Maximum authorised load :	1 250 kg
Registered tonnage (French) :	7.91 Tx

Number of persons authorised depending on category :	A	B	C	D
	XX	8	8	8

Mainsail area:	20.0 m²
Genoa area:	24.0 m²
Asymmetric spinnaker area:	60.0 m²
I :	10.68 m
J :	3.26 m
P :	10.00 m
E :	3.43 m
Freshwater capacity:	90 l rotomoulded
Fuel capacity:	50 l aluminium
Engine: …… … ….	… … … … … …. N° … … … … … … … … … … … …
Installed power:	… … CV - … … kW
Maximum authorised power:	22 kW
Battery:	12 V 65 A
Alternator:	12 V 55 A / h
Gas bottle:	1.8 kg Camping Gaz type
Wetted area:	approx. 18m²

2. DESIGN CATEGORY OF YOUR YACHT

Your FEELING 30 is classed under the "OFFSHORE" design category (Category B) of the European directive for yacht construction (Ref. 95/25/CE).

Your vessel is therefore designed for sailing in normal conditions, in winds not exceeding force 8 on the Beaufort scale and in significant wave heights of less than 4 m.

Its ability to sail also depends on the skills of the crew, their physical capabilities, the condition of the boat and its equipment. Please therefore take these into account before you set out to sea.

At KIRIE, our craftsmen have devoted all their skills and energy to building you a boat you can be proud of and which will provide you and your crew with the greatest enjoyment.

Société Nouvelle KIRIE – BP 1839 Le Châteaud'Olonne - 85118 Les SABLES D'OLONNE

3. CONSTRUCTION

Your Feeling 30 has not only received the greatest care and attention from everyone involved in its construction but also benefits from architectural and technological innovations that make this boat state of the art. KIRIE has drawn on its long experience to select only products of the highest quality for your Feeling 30.

3.1. THE COMPOSITE LAMINATE

The hull is made in GRP (with uni and multiaxial cloths). It is moulded in one piece. The glass cloths are entirely laid up by hand.

Your deck is made in a GRP / balsa sandwich. It has great resistance to compression. The cloths and moulding techniques are the same as those used for the hull.

The floor beams are in solid timber, laminated to the hull then covered with a partial moulding.

3.2. THE INTERIOR FITTINGS

The interior fittings of your Feeling 30 are made in Elm in the form of solid timber, marine plywood or bonded-laminated timber. They are laminated to the hull and deck in order to obtain greater homogeneity and rigidity. We take particular care in the quality of the varnishes applied in several coats.

The high density foam cushions and mattresses are easily uncovered.

The soles are in stripe effect non-skid laminated plywood.

3.3. KEEL AND CENTREBOARD

The keel (or the centreboard) is solidly bolted to the hull with stainless steel backing plates and nuts. The keel (or centreboard) is installed towards the end of construction, as soon as the hull has been strengthened enough to avoid any risk of deformation.

The centreboard is equipped with a control line for raising it and another for lowering it. You will find the operating diagram in the appendices.

4. INTERIOR LAYOUT

4.1. COMPANIONWAY

- Easy access from the cockpit
- Sliding tinted Plexiglas hatch
- 2 part washboards with ventilation
- Broad companionway partially moulded with handrail
- Wooden steps
- Removal panel for access to engine compartment

4.2. SALOON

- Saloon table with two drop leafs
- Bar and stowage in table pedestal (fixed keel version only)
- L-shaped settee to port with stowage underneath
- Straight settee to starboard with stowage underneath
- Shelf and stowage on both hull sides
- Stripe effect laminated sole
- Stainless steel mast pillar
- Lighting by:
  - 1 forward opening deck hatch 450x320
  - 2 coachroof trunk Plexiglas windows
  - 1 Plexiglas coachroof top window
  - 2 deckhead lights

4.3. CHART TABLE

- To starboard, forward facing
- Desk with chart stowage and stowage underneath
- Instrument panel for mounting all instruments
- Electrical panel
- Helmsman's seat with stowage underneath
- Lighting from 1 deckhead light

4.4. GALLEY

To port

- 2 burner gimballed gas stove
- Stowage underneath
- Cooler 100l approx. (refrigerator compressor on option)
- Shelf along hull side

- Single sink
- Pressurised water
- 1 deckhead light

4.5. FORWARD CABIN

- Double berth with mattress
- Stowage bin and tank underneath
- Shelf along hull side
- Deckhead light
- Opening deck hatch 470x470 (emergency exit)
- Sliding doors to saloon

4.6. AFT CABIN

- Double berth with mattress
- Stowage underneath and fuel tank
- Large hanging locker against hull side
- Lateral shelf
- Access to engine
- Deckhead light
- Opening port-light on coaming
- Opening cockpit port-light
- Door to saloon

4.7. HEAD

- Moulded base
- Washbasin with cold water shower fitting (hot water on option)
- Shower tray
- Marine toilet
- Locker under washbasin with access to sea-cocks
- Shelf unit on side and mirror
- Opening coaming port-light and deckhead light
- Door to saloon
- Access door to cockpit locker

Société Nouvelle KIRIE – BP 1839 Le Châteaud'Olonne - 85118 Les SABLES D'OLONNE

5. ELECTRICITY

Your Feeling 30 is equipped with a 12 V DC system as standard and a 230 V AC system on option.

5.1. GENERAL

IMPORTANT

Always:

- Check the condition of the batteries and the charging system before putting to sea.
- Disconnect and remove the batteries for winter storage.
- Keep the battery voltage at more than 10.5V during winter storage.
- Check that the navigation equipment is working.
- Check that the navigation lights are working before sailing at night and carry replacement bulbs for all the navigation and internal lights.

Never:

- Work on any electrical equipment while it is connected.
- Modify the electrical installation or the main wiring unless this is done by a qualified marine electrician.
- Change or modify the breaking capacity of any overload protection.
- Install or replace any electrical equipment with components rated for a higher capacity than that prescribed without recalibrating the conductors and the fuses.
- Leave the boat unattended when the electrical equipment is on.

5.2. 12 V SYSTEM

The 12V system includes a 65 Ah batteriy located in the tunnel in the starboard cockpit locker. The batteries are connected to circuit breakers, the "-" are common. It is possible to fit an optional second battery.

The 12V DC electrical panel is equipped with single pole circuit breakers for each function and a voltmeter. The voltmeter indicates the state of charge of the batteries. To power the system, switch on the " + " and " - " circuit breakers. This feeds power to the electrical switchboard. Each function is protected by a single pole circuit breaker whose capacities are given in the appendices.

To feed a function, switch on the corresponding circuit breaker, a red warning light comes on.

5.3. 230V SYSTEM (OPTION)

When your Feeling 30 is equipped with a 230V AC system, a 230V AC electrical panel is fitted in a watertight box in the starboard locker. The installation is protected by a 16A-30mA differential circuit breaker associated with two circuit breakers.

As soon as the main circuit breaker is switched on, the electrical plugs are powered. For the other functions, the corresponding bipolar circuit breaker must be switched on. The electrical panel instruction notice and the relevant wiring diagrams can be found in the appendices.

Do not modify the boat's electrical installation or wiring diagrams. Maintenance and repairs should be carried out by a qualified marine electrician.
Please contact your dealer.

Wherever possible use appliances with double insulation or three conductors.
Connect the boxes or metal casings of appliances to the conductors of the boat's protection devices (green and yellow conductor).

WARNING

To reduce the risk of fire or electric shock:

- Switch off the power at the dock using the installed selector switch before connecting or disconnecting the boat / dock power cable.
- Connect the boat / dock power cable in the boat before connecting it to the power point on the dock.
- Disconnect the boat / dock power cable from the power point on the dock first.
- Close the protective cover on the dock power point firmly.

- Do not let the end of the boat / dock power cable dangle in the water – this can create an electrical field that could injure or kill any swimmers in the area.
- Do not modify the boat / dock power cable connections; always use compatible connections.

5.4. ELECTRICAL CONSUMPTION

The capacity of the batteries has been designed to provide the power requirement of all onboard accessories. To avoid problems, however, always ensure that the batteries are properly charged and maintained.

IMPORTANT

If you install any new electrical equipment, please ensure that the battery capacity is still suitable for the new overall level of consumption.

5.4.1. Calculating consumption

To calculate the consumption of your equipment and determine how much life your batteries have before they require recharging, multiply the consumption by the number of items of equipment and the operating time in hours.

e.g. 1 navigation light 2 Ah x 1 light x 3 hours = 6A

The battery output is 70% so the result must be multiplied by 1.4, i.e. :
6 x 1.4 = 8.4 A

The FEELING 30's alternator supplies 55 A in one hour. So the engine must be run for 9 minutes to recharge.

$$\frac{5.6 \times 60}{55} = 9 \text{ minutes}$$

5.4.2. Maximum consumption of electrical equipment of the FEELING 30

Type of appliance	Consumption
Two-coloured light	1.8 A
Reading light	0.8 A
Deckhead light	0.8 A
Electric pump	5 A
Water pump	6 A
Refrigerator compressor	5 A

(Values given as a guideline only)

5.4.3. Examples of consumption of electrical equipment

Type of appliance	Consumption
Radar	6 to 8 A
Radiotelephone, VHF on standby	1 A
Radiotelephone, VHF in transmission	5 A
Log / speedo	0.1 A
Anemometer / wind vane	0.1 A
Automatic pilot, tiller steering	1 à 3 A

(Values given as a guideline only)

5.4.4. Fitting new electrical equipment

Since 1st January 1996, all electrical equipment is subject to the European "Electromagnetic Compatibility" directive (Ref 89/336/CEE). Any new equipment installed must conform to this standard and be CE marked. The equipment must also be supplied with a certificate of conformity and a user's manual. Please contact your dealer about installing such equipment or carefully follow the installation instructions (particularly the sections on wiring and system protection).

MECHANICAL SYSTEM

5.5. GENERAL

Your Feeling 30 is equipped as standard with a 18 hp Volvo diesel engine selected by KIRIE for its mechanical properties and the quality of the after-sales service provided by the manufacturer.

Carefully read the instructions for operating the engine before starting it. Do not hesitate to contact your dealer.

The engine must be regularly maintained in accordance with the manufacturer's recommendations (levels, oil changes, lubrication, etc.). Carefully follow the instructions for winter storage.

The propeller shaft is in 316L stainless steel of 25 mm diameter. The propeller nose is 10% and we recommend a LH15x10 type fixed two-blade propeller.

5.6. STARTING

The " -" and " + engine" circuit breakers must be switched on for the engine to start. Then read the user's manual for the engine and follow the instructions below.

- Open the engine raw water inlet sea-cock
- Open the fuel tank valve
- Place the engine in neutral and apply a little throttle
- Pre-heat for a few moments
- Start
- Check that water flows normally from the exhaust.

IMPORTANT

After each hauling out or beaching, press the bellows of the rotating seal (at the end of the propeller shaft tube) to fill it with water and to avoid burning the seal, before starting the engine.

5.7. EXHAUST GAS EMISSIONS

DANGER

Combustion engines produce carbon monoxide gas. Prolonged exposure to exhaust fumes can have serious consequences and even kill.

5.8. SAFETY

PRECAUTIONS!

Match the speed of your boat to the surrounding conditions in all situations, leaving a margin of safety. Pay particular attention to:

- The sea conditions, currents and the force of the wind.
- Traffic.
- Manoeuvring in port.
- Passing through moorings.
- To lower the centreboard (on lifting keel versions) during harbour manoeuvres.

5.9. MAINTENANCE

Your engine should be regularly serviced. Do not forget to validate your warranty with a Volvo agent.

IMPORTANT

- Regularly check the oil levels (in the engine and the gearbox) and the water level.
- Scrupulously observe the engine manufacturer's servicing and maintenance instructions
- Do not stow anything in the engine compartment.

6. FUEL SYSTEM

6.1. GENERAL

The aluminium fuel tank is found under the aft berth. It is fitted with a float guage.

ATTENTION
Never: - Store inflammable materials in unventilated spaces. - Smoke when refilling the tanks. - Block the ventilation holes or engine ventilation grills. - Block the access to the shut-off valve

6.2. FUEL SYSTEM

Your Feeling 30's fuel system is designed to ISO 7840 standard. There is a shut-off valve on the tank (under the aft berth). The fuel gauge is fitted on the electrical switchboard. Do not alter your boat's fuel circuit. Regularly check the condition of the hoses, especially around the collars.

7. STEERING SYSTEM

The steering system is an essential element in the comfort and safety of your boat.Kirié has chosen to fit the Feeling 30 with twin rudders both on the lifting and fixed keel versions. The stocks in F16PH stainless steel are both guided by 2 JP3 self-aligning bearings in their rudder tubes. A central stock allows tiller movement to be transmitted to each rudder stock via a pushrod.

Diagram of the system in the appendices

8. GAS

8.1. CHARACTERISTICS OF THE SYSTEM

Type of bottle : Camping Gaz butane 2.8 Kg, maximum output of the regulator : 500 g/h, system operating pressure : 28 mb.

ADVICE FOR OPERATION

- Carefully read the operating instructions for the stove and the gas regulator.
- Close the valves on the supply hoses and gas bottles when the appliances are not in use.
- Ensure that the gas taps on the stove are closed before opening the bottle valve.
- Close all the valves in the system when the boat will be unoccupied, even if you think the bottle is empty.
- The appliances burn fuel, consume oxygen in the cabin and emit combustion gases into the boat. Ventilation is required when the appliances are being used. Open the hatch covers when you are cooking.
- Do not use the stove to heat the cabin.
- Do not obstruct rapid access to any of the gas system components.
- Do not leave the boat unattended when a gas appliance is lit.

IMPORTANT

In the event of an emergency, the gas system valves must be closed immediately.

8.2. CHECKING THE SYSTEM

The gas system must be checked periodically as follows:

Check that there are no leaks in the connections, using a leak detector or soapy water, and that the valves on the appliances are closed, including the open bottle. If you detect a leak, close the valve on the bottle and repair the system before using it again. Repairs should only be carried out by qualified personnel. Do not hesitate to contact your dealer.

ATTENTION

- Do not use ammonia-based solutions.

DANGER

- The hoses must be checked regularly, at least once a year, and replaced on the date indicated on the hose or in the event of any deterioration.
- Never use a flame to search for leaks

8.3. CHANGING THE GAS BOTTLE

DANGER

The gas bottle can be found in the small locker behind the head

- Close the taps on the stove and below the sink.
- Do not smoke or use a naked flame when replacing the gas bottle.

9. PLUMBING

9.1. GENERAL

You will find in the appendices the different plumbing diagrams. The skin-fittings and sea-cocks used on your Feeling 30 are in brass.

The sea-cocks used on your Feeling 30 are ¼ turn types :
CLOSED position: lever at right angles to the hose.
OPEN position: lever in line with the hose.

ATTENTION

- Close all the valves and cocks in the plumbing system when leaving your boat.
- When sailing keep all the valves and cocks shut except for those in immediate use.
- Clean and rinse the sea-cocks and the valves before winter storage

- Never adjust the tightness of sea-cocks on the hull. If you discover a leak, please consult your dealer.

9.2. FRESHWATER SYSTEM

The pressurised freshwater system of the FEELING 30 includes a tank located under the forward berth, a filter and an electric pump coupled to an accumulator. This system enables the pressure to be regulated and avoids the hammer effect.

To obtain freshwater you must switch on the water pump function on the electrical switchboard; the system is then pressurised.

The gauge on the electrical panel enables indicates the level of water in each of the 2 tanks.

Remember to shut off the circuit breaker of the plumbing system when you have finished using it.

9.3. SEAWATER SYSTEM (OPTION)

Your Feeling 30 is equipped with a seawater foot pump in the galley. A skin fitting and a sea-cock is fitted under the sink for drawing seawater.

9.4. OPERATION OF MARINE TOILETS

- Open the seawater inlet cock.
- Open the seawater outlet cock.
- Set the lever to the "OPEN - FLUSH" position.
- Operate the pump.
- To empty the bowl avoiding any water slopping, set the lever to "CLOSED - DRY BOWL".
- When the toilets are not in use, set the levers to "CLOSED - DRY BOWL"
- Close the valves after use.

Do not throw anything down the toilet. If the drainage system becomes blocked, check that the sea-cocks are firmly closed before disconnecting the hoses.

9.5. WASTEWATER HOLDING TANKS

The boat is not fitted as standard with wastewater holding tanks. It is however possible on option to fit this type of tank either permanently or semi-permanently. Please contact your dealer.

9.6. HOT WATER (OPTION)

Your boat can be fitted with a water heater on option. Hot water is obtained either by running the engine (20 to 30 minutes to obtain water at 60°C) or in harbour with the 230V AC system by connecting the boat to the shore power.

The water is fitted in the technical compartment in the starboard locker. Remember to regularly check the condition of the heating element.

Diagram of the hot water system in the appendices.

10. FLOODING / BAILING

The FEELING 30 has two bilge pumps for bailing the boat:

- -an electric bilge pump found behind the backrest of the starboard saloon settee, drawing from the lowest point of the boat under the saloon sole and in the shower. A three way cock located close by enables choosing between the shower tray or the bilges. To switch on the pump for emptying the shower, switch on the water pump function on the electrical panel and switch on the switch in the shower.

- -a manual bilge pump, located in the cockpit drawing from the lowest point of the boat under the saloon sole.

Read the instructions for the pumps carefully, especially the maintenance instructions.

ATTENTION

To reduce the risk of water flooding the boat:
- Close the deck hatches and the port-lights before sailing.
- Close the plumbing sea-cocks when sailing.
- Periodically check:
  - the seals on the *sea*-cocks, valves and plumbing.
  - that the cockpit drains are flowing freely.
  - the propeller shaft seal.

11. PROTECTION AGAINST FIRE

11.1. CHARACTERISTICS

Your Feeling 30 should be equipped with at least 3 fire extinguishers distributed as follows:

- 1 extinguisher in a cockpit locker.
- 1 extinguisher near the companionway and the cooker.
- 1 extinguisher in the forward cabin.

Each extinguisher must have a minimum capacity of 5A/34B.

A fire blanket must be stored in the locker under the chart table.

If there is a fire in the engine compartment, this can be extinguished without opening the compartment by removing the red bung found in the companionway between the first and second steps, placing the nozzle over this hole and then operating the extinguisher.

The emergency exits are the fixed companionway steps and the deck hatch in the forward cabin.

11.2. SAFETY INSTRUCTIONS

IMPORTANT

It is the boat owner's or captain's responsibility to:

- check the fire extinguishing equipment in accordance with the manufacturer's instructions.
- replace any out of date or used fire extinguishing equipment with equipment of similar or of higher capacity.
- ensure that the fire extinguishing equipment is readily accessible when the boat is occupied
- instruct every member of the crew regarding:
  - the location and operation of the fire extinguishing equipment
  - the location of the extinguisher hole for the engine compartment on the companionway steps (red bung).
  - the location of the emergency exits

ATTENTION

Always:

- Keep the bilges clean and regularly check for the build up of fuel vapour or gas
- Only replace items of fire extinguishing equipment with similar equipment of the same description, technical capacity and fire resistance

Never:

- Obstruct access to the emergency exits (deck hatches).
- Obstruct access to the safety controls (gas valves, fuel valves, electrical switches).
- Obstruct the lockers housing fire extinguishers.
- Leave the boat unoccupied when the stove or the heating is on.
- Use gas lamps in the boat.
- Refill the fuel tank or change a gas bottle when the stove or the heating is on.
- Smoke when handling fuel or gas.
- Hang free-hanging curtains near the stove or any other appliance with a naked flame.
- Stow combustible products in the engine compartment.

ATTENTION

- CO_2 extinguishers should only be used for electrical fires.
- A fire in the engine compartment should be extinguished using the extinguisher hole located in the panel on the companionway steps (red bung).
- Once the fire is out, do not immediately open the engine compartment; this avoids the risk of toxic fumes or superheated fluids (oil, water) escaping.

12. RIGGING AND SAILS

12.1. MAST AND STANDING RIGGING

The mast is an essential part of your yacht: it is well dimensioned and well provided with stays. You must, however, tension it correctly and regularly check the condition of the mast and standing rigging. Carefully follow the mast manufacturer's instructions for tensioning and maintaining your mast.

12.2. GENOA FURLER

Your Feeling 30 is equipped as standard with a PROFURL B29S genoa furling system specially selected for its ease of use, robustness and the quality of service provided by the manufacturer. Regularly check the condition of the drum and the tubes. Follow the manufacturer's instructions.

12.3. THE SAILS

The sails are your yacht's main source of propulsion. Take good care of them and they will provide maximum power. They are very susceptible to friction wear. The synthetic fibres can be damaged by chafing, particularly on the seams. Mark any places where there is a risk of chafing and protect them.

Do not let your sails flap because this can break the fibres inside the sails.

12.3.1. Breaking in

It is very important to break in your sails. In fact, they will take their proper shape and the threads in the seams will stretch to their final position under their initial load. Your sails will only keep their good appearance and provide good service if they are properly broken in.

12.3.2. Tensioning

You must apply equal tension to the sail in all directions (luff, leech and foot)

For a headsail, the more you harden the sheet, the more you have to tighten the luff.

For a mainsail, the more tension on the leech, the more you have to tighten the foot and the halyard.

12.3.3. Furling and maintenance

You should always take time to furl your sails carefully. How they are folded is very important, even at sea.

If the sails are wet with seawater, rinse them thoroughly with freshwater and allow them to dry before folding them. They should be flaked along the seam and then rolled from the clew.

If the sails are to be permanently rigged, we recommend that you protect them from UV rays and the weather (the furling genoa with a protective UV strip or a cover, the mainsail with a cover).

Never use acetone or soda to clean the sails.

12.3.4. The spinnaker (option)

The Feeling 30 has been designed to receive an asymmetrical spinnaker. It is used off the wind. The spinnaker is tacked onto a bowsprit.

It must be carefully packed before use to avoid tangling.

Leave the genoa in place when setting the spinnaker, then furl it once the spinnaker is set. In the same way, unfurl the genoa before handing the spinnaker.

12.3.5. Reducing sail

Your Feeling 30 is fitted as standard with 2 automatic reefs returning to the cockpit on the port side. As soon as the wind rises, reduce sail, you will have a more comfortable helm and better control of your boat.

12.3.6. Distribution of sail area

The following table provides an idea of which sails to set according to the wind conditions but factors other than the wind must also be borne in mind:

- The sea state.
- The comfort and capacity of the crew.
- Entering and leaving port, proximity to danger.
- Expectation of heavy weather or fog.

WIND Beaufort	SAILS	BEATING	REACHING	BROAD REACHING	RUNNING
scale 0 to 2	Main	Full	Full	Full	Full
	Genoa	Full	Full or spi	Full or spi	Full or spi
2 to 3	Main	Full	Full	Full	Full
	Genoa	Full	Full or spi	Full or spi	Full or spi
3 to 4	Main	Full	Full	Full	Full
	Genoa	Full or mark 1	Mark 1 or spi	Mark 1 or spi	Mark 1 or spi
4 to 5	Main	1 reef	1 reef	Full	Full
	Genoa	Mark 2	Mark 1	Mark 1 or spi	Mark 1 or spi
5 to 6	Main	2 reefs	2 reefs	1 reef	1 reef
	Genoa	Mark 2	Mark 2	Mark 1 or 2	Mark 1 or 2
7 to 8	Main	XXX	XXX	2 reefs	2 reefs
	Genoa	Storm jib	Storm jib	Storm jib	Storm jib
ABOVE, REMAIN IN HARBOUR					

12.4. RUNNING RIGGING

For the running rigging to retain its original qualities as long as possible, you must rinse it in freshwater. We recommend that you do not leave any rigging contaminated with seawater in the sun because it will then rapidly deteriorate.

Maintenance:

- Whenever possible, hang up the running rigging to avoid it lying soaked in seawater.
- During winter storage, stow any rigging that can be removed from the deck in a locker. The halyards can be replaced by messenger lines.

13. DECK FITTINGS

KIRIE has selected quality deck fittings for your Feeling 30. Your boat's deck fittings are installed on reinforcements suitably dimensioned for the loads. In sandwich zones, a plywood insert locally replaces the balsa core. Regular rinsing of the deck and the external fittings with freshwater will lengthen their service life.

The layouts for the deck fittings and the running rigging are provided in the appendices.

13.1. MAINTENANCE

The winches must be serviced at least once a month and before any major passage.

- Remove the winch taking care to mark the position of the pawls.
- Degrease it using an industrial product or diesel oil.
- Rinse it in freshwater.
- Dry it.
- Lubricate it lightly and uniformly using a Teflon or silicon-based product.

The blocks consist of aluminium and stainless steel components. Electrolysis may cause some specks of corrosion. To delay this process, rinse the pulleys frequently with freshwater and lubricate them with a Teflon or silicon-based product.

Some specks of corrosion may appear on the stainless steel components. The quality of the steel is not to blame; this is usually due to ferrous deposits or atmospheric agents. Do not allow corrosion to take hold, however, rinse the components with freshwater and rub them gently using a non-abrasive passivating polish.

13.2. FITTING ADDITIONAL DECK FITTINGS

You should not improvise when installing additional deck fittings. Several parameters must be taken into account; the position of the component, any interference with other components, internal access, load, etc. Please contact your dealer who is a marine professional.

If you wish to install any deck fittings, please proceed as follows:

- Ensure free access from inside.
- Position the component.
- Mark the holes required.
- Drill holes exactly the size of the bolts being used.
- Mill the edges of the holes.
- Coat the holes and the bolts with silicon-based mastic.
- Bolt the component in place taking care to use a backing-plate or washers, depending on the amount of traction the component must withstand.
- Tighten the bolt without crushing the laminate.

- Replace the headlining.

If you are unsure, do not embark on any work that you cannot finish properly or that endangers the watertightness of the vessel.

Check with your dealer or a specialist boatyard.

13.3. WINDLASS

Your Feeling 30 is fitted with a vertical manual windlass. The gypsy is specified for 8 mm chain. Once the ground tackle has taken, remember to seize the chain on a cleat or with the help of a line. If you sail with the anchor on the stemhead fitting, seize it with a line.

On option the windlass can be electric. The remote control is connected in the forward cabin. An 80A circuit breaker protects the windlass power circuit, it is located behind the electrical panel. The wiring diagram is found in the appendices.

ATTENTION

Always:
- Drop anchor controlling the speed of the chain
- Seize the anchor on the stemhead fitting
- Stow the anchor in the chain locker on long passages

Never:
- Guide the chain with hands or feet
- Leave the chain only on the windlass (seize it on a cleat)

14. MAINTENANCE OF UNDERBODY

14.1. PROTECTION

You must regularly protect your hull under water with antifouling paint. This will protect your hull against algae and barnacles that can damage the hull and considerably reduce the Feeling 30's performance.

14.1.1. The hull

For extra osmosis protection of your underbody, we recommend the application of an epoxy primer. Please contact your dealer or proceed as follows:

- Clean the hull with a degreasing agent to remove any remaining mould extraction wax.
- Mark out the area for painting with masking tape.
- Apply 2 coats of epoxy primer to the hull, then 2 coats of antifouling paint.

IMPORTANT

- Scrupulously observe the application instructions for the products you are using.
- Never cover the anode with antifouling paint

14.1.2. The keel (fixed keel version)

The keel of your Feeling 30 is in lead. It should be treated with an appropriate protection. Apply 1 coat of keying primer for lead, then 2 coats of epoxy paint and 2 coats of antifouling.

14.1.3. The ballast plate of the lifting keel version

The ballast plate of the lifting keel version of the Feeling 30 is in cast iron. During regular maintenance, two situations may arise.

No traces of rust appear on the ballast, treat as per the hull.

The ballast plate shows signs of rust spots:

Strip, sand and apply 2 coats of anti-corrosion paint and 2 coats of antifouling.

14.2. SCRUBBING

Scrubbing two or three times a year is preferable to once a year. This provides an opportunity to check the condition of the sea-cocks, the valves, the rudder blade, the sail drive, the anodes and the cleanliness of the engine raw water intake grill. You can employ a high-pressure water jet not exceeding 60 bars provided that the nozzle is kept at least 50cm away from the hull. Do not use a scraper, detergents or any solvent not recommended by your dealer.

The anode degrades more or less rapidly depending on the place where your boat is moored (aluminium pontoon) and the hull material of the neighbouring vessels (steel, aluminium, GRP). It should be regularly checked and replaced. To restrict electrolysis, the batteries should be switched off every time you leave your boat.

15. MAINTENANCE OF TOPSIDES

The GRP composite requires little maintenance but it is useful to carry out a minimum of work to keep your boat in its original condition.

Scrapes and cracks in the gelcoat do not affect the structural integrity of your boat in any way. The gelcoat is not part of the structure but it is important to ensure that no water can penetrate the laminate. You should therefore repair any cracks immediately. It is important to consult your *dealer* if you suffer a major impact.

15.1. MAINTENANCE OF HULL AND DECK

- Wash down your boat with freshwater after each trip to preserve its sheen.
- Preferably use a product specially designed for GRP for the hull and the deck or use washing powder.
- Rinse thoroughly after each "washing".
- Do not use abrasive detergents or acid.

15.2. REPAIRS TO THE HULL OR THE DECK

15.2.1. Light scratches:

- Sand down with water and No. 400 and then No. 600 wet and dry paper.
- Rinse thoroughly frequently.
- Shine with a gelcoat polish.

15.2.2. Cracks in the gelcoat in smooth areas:

- Clean and dry the damaged section.
- Catalyse it.
- Use a spatula to apply a little catalysed gelcoat of the same colour as the deck or the hull (see your dealer).
- Cover the repair with polyamide film or adhesive paper.
- Remove the film when the repair is dry.
- Sand down with water and No. 400 and then No. 600 wet and dry paper.
- Rinse thoroughly frequently.
- Shine with a gelcoat polish.

15.2.3. Chips in the anti-skid surface

Please consult your dealer.

15.2.4. Cracks in the anti-skid surface

Please consult your dealer.

15.3. SCRATCHES TO THE PORT-LIGHTS

- Rub down with a soft cloth or piece of cotton coated with a metal polish.
- If the scratches are deep, check with your dealer.

IMPORTANT
Never use solvents to clean deck hatches and port-lights.

15.4. MAINTENANCE OF EXTERIOR WOODWORK

The wood used for your Feeling 30 deck is solid teak and requires little maintenance. It will fade naturally from atmospheric effects. You can also apply a maintenance product specially designed for teak.

16. PROTECTION AGAINST LIGHTNING

Your Feeling 30 is protected against lightning. The rigging is electrically earthed by means of a stainless steel chainplate and an earthing braid connecting it to the keel bolts. Safety precautions should however be observed.

16.1. PROTECTING PEOPLE DURING A STORM

ATTENTION

The following advice should be followed during a storm:

- Remain inside the boat as much as possible.
- Do not go into the water or dangle your arms or legs in the water.
- While maintaining appropriate control of the vessel, do not touch any component connected to the lightning conduction system, particularly in any way that would form a connection between any of these components.
- Avoid contact with any of the metal components in the rigging, the spars, the external fittings and the guardrails.

16.2. FOLLOWING A LIGHTNING STRIKE

If the vessel has been struck by lightning:

- The lightning conduction system must be inspected for material damage and to check the integrity of the system and the continuity of its earth.

- The compasses and the electrical and electronic equipment must be inspected for any damage or any change in calibration.

17. PROTECTION OF THE ENVIRONMENT AND SAFETY

Most maintenance products, engine oils and fuels or similar hydrocarbon products are harmful to the environment; they should only be disposed of in the appropriate places (please check with the harbour master.

IMPORTANT

- Certain products also represent a risk to your own and others people's safety; you should therefore always follow their instructions for use.
- The products used should be labelled and stowed in an appropriate location on the vessel.

- Do not start the bilge pump if there is oil or fuel in the engine compartment; such products should only be discharged at the locations prescribed by law.
- Do not use the boat's toilet when in port.
- Store your rubbish bags for disposing when you return to port.
- Never throw anything into the sea.

The Feeling 30 can be fitted with grey or black water holding tanks.

18. SAFETY EQUIPMENT

There is as yet no common agreement within the European Community regarding compulsory safety equipment. We can inform you, however, of the prevailing French regulations for vessels with CE approval. Please contact your dealer

Your Feeling 30 should be fitted with ground tackle equipment to the following minimum specifications:

A main ground tackle consisting of:

- a 14kg anchor
- 18m of 8mm chain
- 30m of 14 mm rode

a secondary ground tackle consisting of:

- a 14kg anchor
- 8m of 8mm chain
- 37m of 14 mm rode

docklines

19. HANDLING, HAULING OUT AND BEACHING

Any lifting must be carried out by professionals. When lifting the vessel from the water, ensure that the slings are correctly positioned and that they do not pull against the sail-drive leg or any fragile transducers. There are small arrows under the toerail marking the position for the slings.

Travel lifts should be wide and fitted with spreaders to avoid excessive transversal force on the topsides and guardrails.

During transportation or hauling out, the keel should be well supported on its bulb supporting most of the vessel's weight.

The cradle pads should be positioned on the structural elements and only exert sufficient pressure to maintain the vessel upright.

Take advantage of when the vessel is out of the water to check the sail-drive unit, the rudder blade, the sea-cocks and the condition of the anodes.

When drying out or beaching (for the lifting keel version) remember to completely raise your centreboard. Check that the zone where you are going to dry out is not rocky or presents any other type of surface susceptible in damaging the boat.

IMPORTANT

Precautions to take when lifting the vessel out of the water

- Raise the log impeller.
- Check that the lifting slings do not interfere with the sail-drive unit and propeller.
- Check the condition of the mast.
- Switch the engine off before lifting the vessel out of the water.

- Do not remain on board during lifting.

20. WARRANTY

KIRIE guarantees against any hidden defect that could render our products incapable of sailing for the whole of the period prescribed by law. Any modification to our products and in particular the installation of parts other than original parts immediately invalidates this warranty.

The hull underbody is guaranteed against osmosis for a period of 5 years.

All the equipment is covered by individual manufacturer's warranties for 1 year.

This warranty allows the purchaser to obtain repair or replacement of any part recognised as defective provided that the user has correctly carried out the necessary maintenance at the prescribed intervals. This warranty does not cover transport and handling costs nor any other loss, in particular through immobilisation.

✂………

Cut along the dotted line

Delivery receipt

I the undersigned………………………………………………owner of Feeling 30 N°……………………, declares having received the owner's manual, containing the declaration of compliance with the standard registered tonnage of a production recreational craft and the CE declaration of compliance.

The boat was delivered complete and in good condition.

This boat is covered by the conditions of warranty figuring on page 38 of the owner's manual.

The warranty starts on ……………………………, the date of delivery of my boat.

Date ……………………….

Signature

ANNEXES

AMENAGEMENTS
INTERIOR LAYOUT

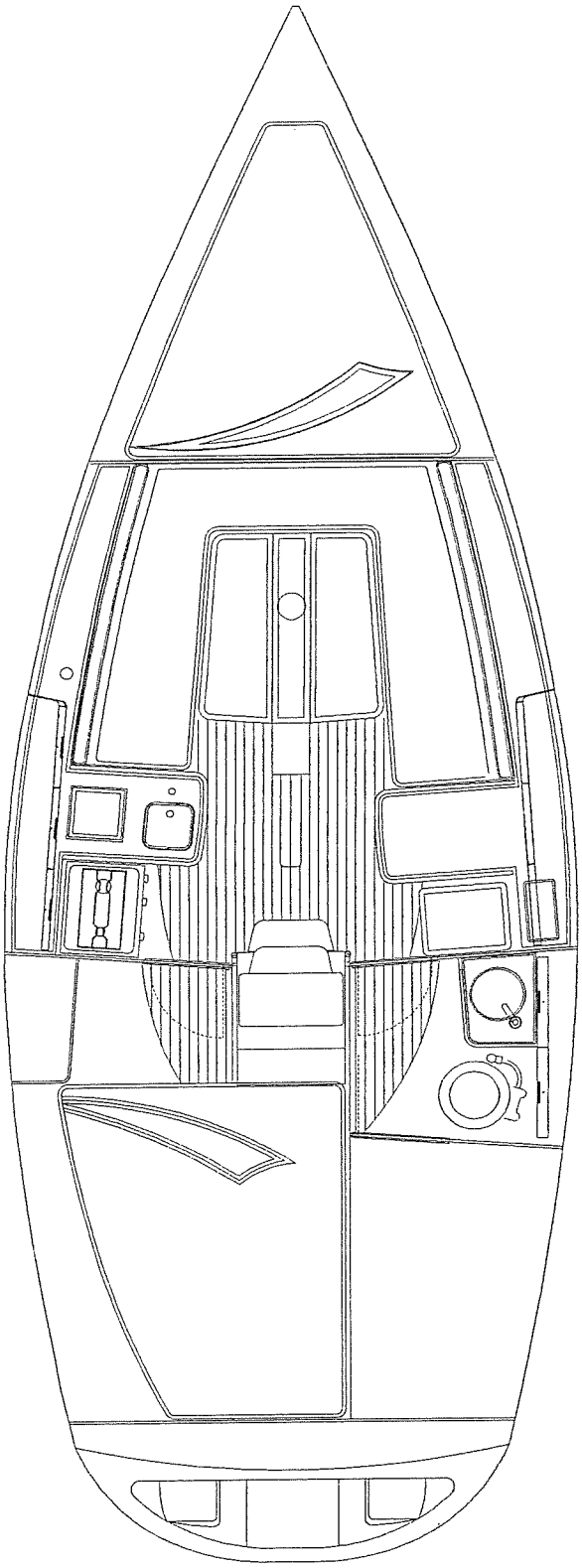

CIRCUIT 12 V CC
12V DC SYSTEM

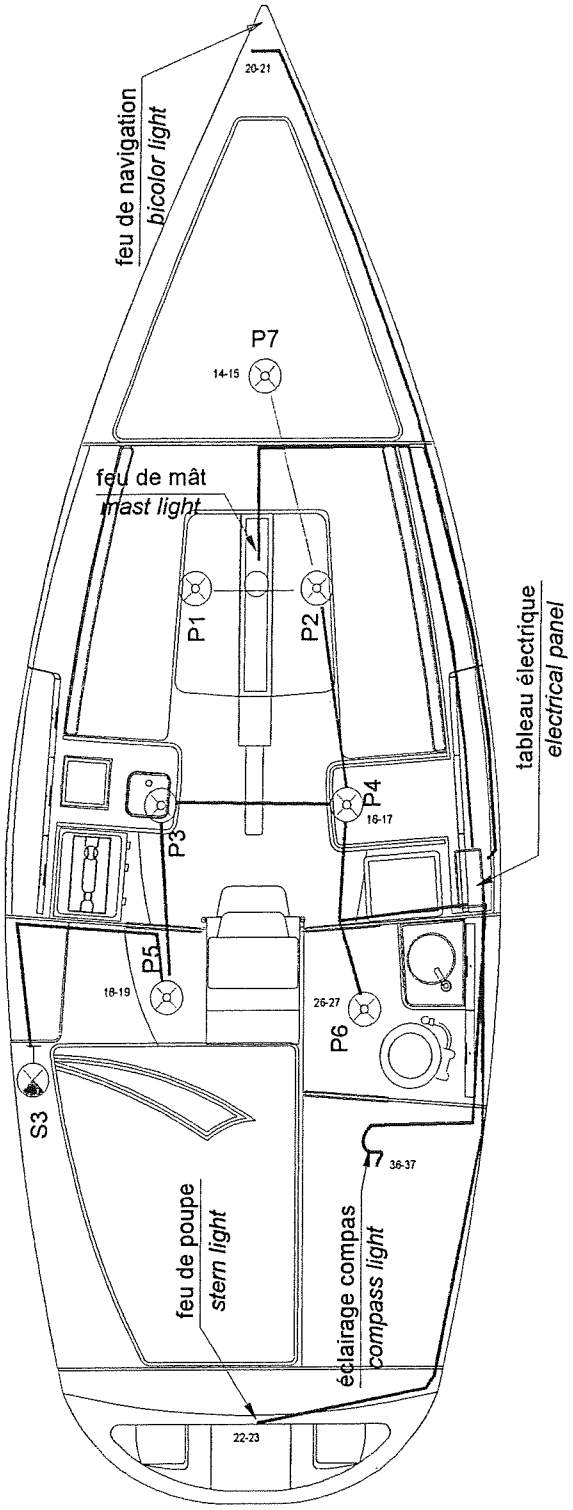

CIRCUIT DE CHARGE - CIRCUIT 230V (option)
220V AC SYSTEM (option)

CIRCUIT DE CHARGE STANDARD
STANDARD CHARGE WIRING

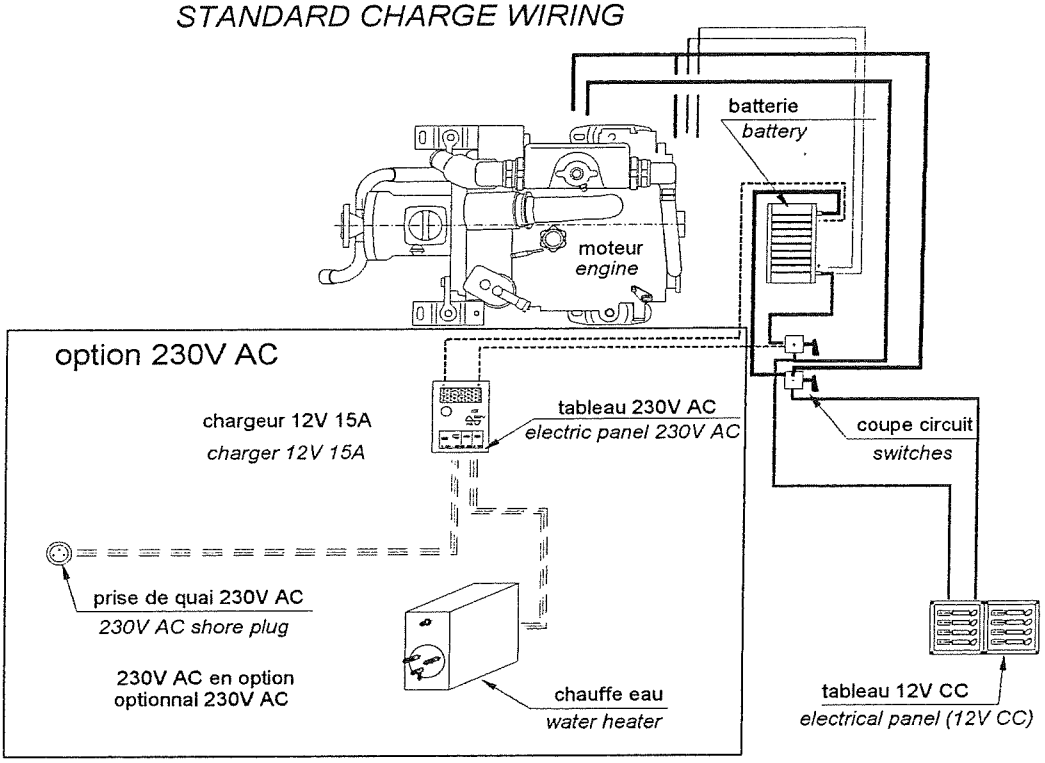

CIRCUIT DE CHARGE AVEC OPTIONS
CHARGE WIRING WITH OPTIONS

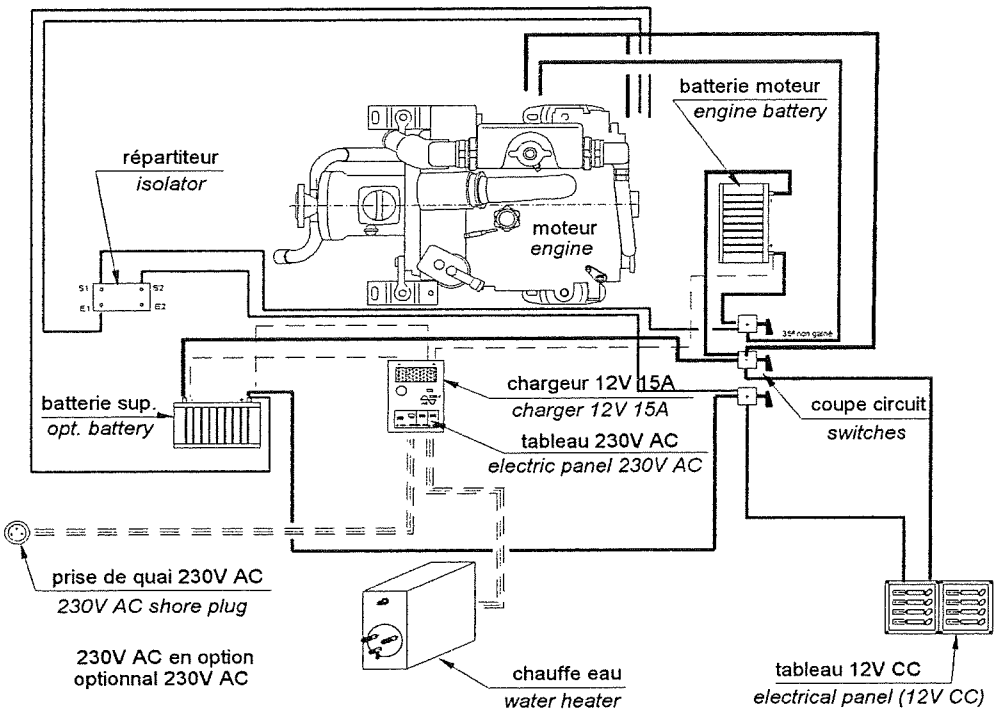

CIRCUIT GUINDEAU ELECTRIQUE (option)
ELECTRICAL WINDLASS SYSTEM (option)

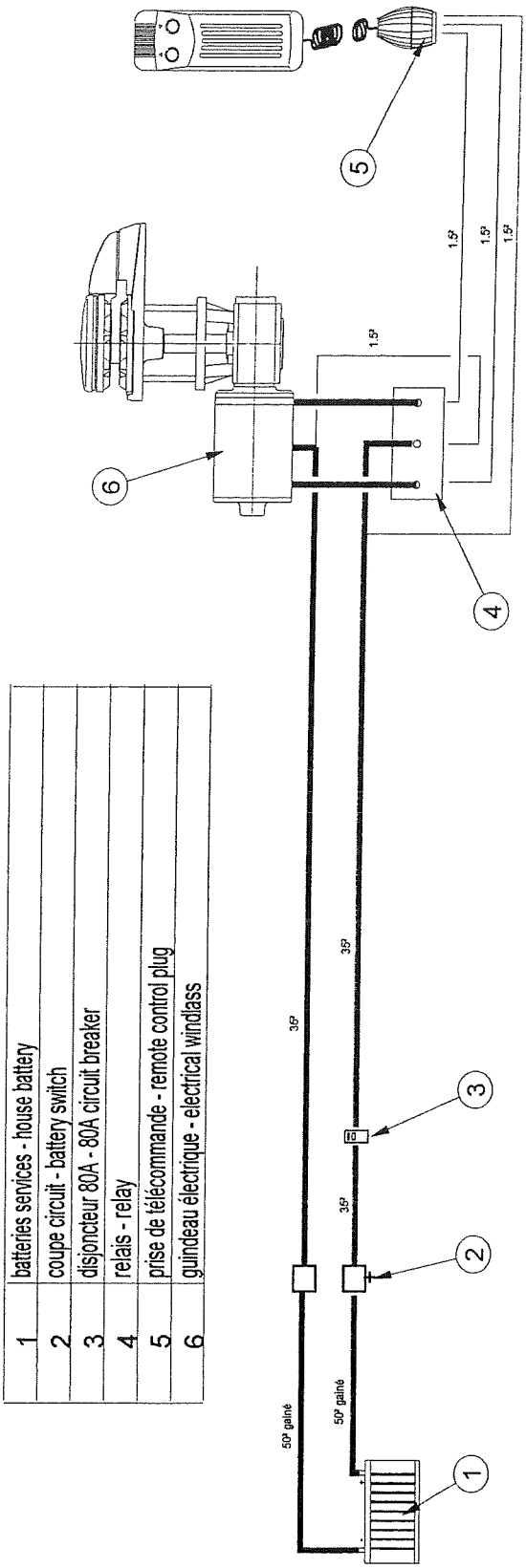

1	batteries services - house battery
2	coupe circuit - battery switch
3	disjoncteur 80A - 80A circuit breaker
4	relais - relay
5	prise de télécommande - remote control plug
6	guindeau électrique - electrical windlass

IMPLANTATION MOTEUR
ENGINE SYSTEM

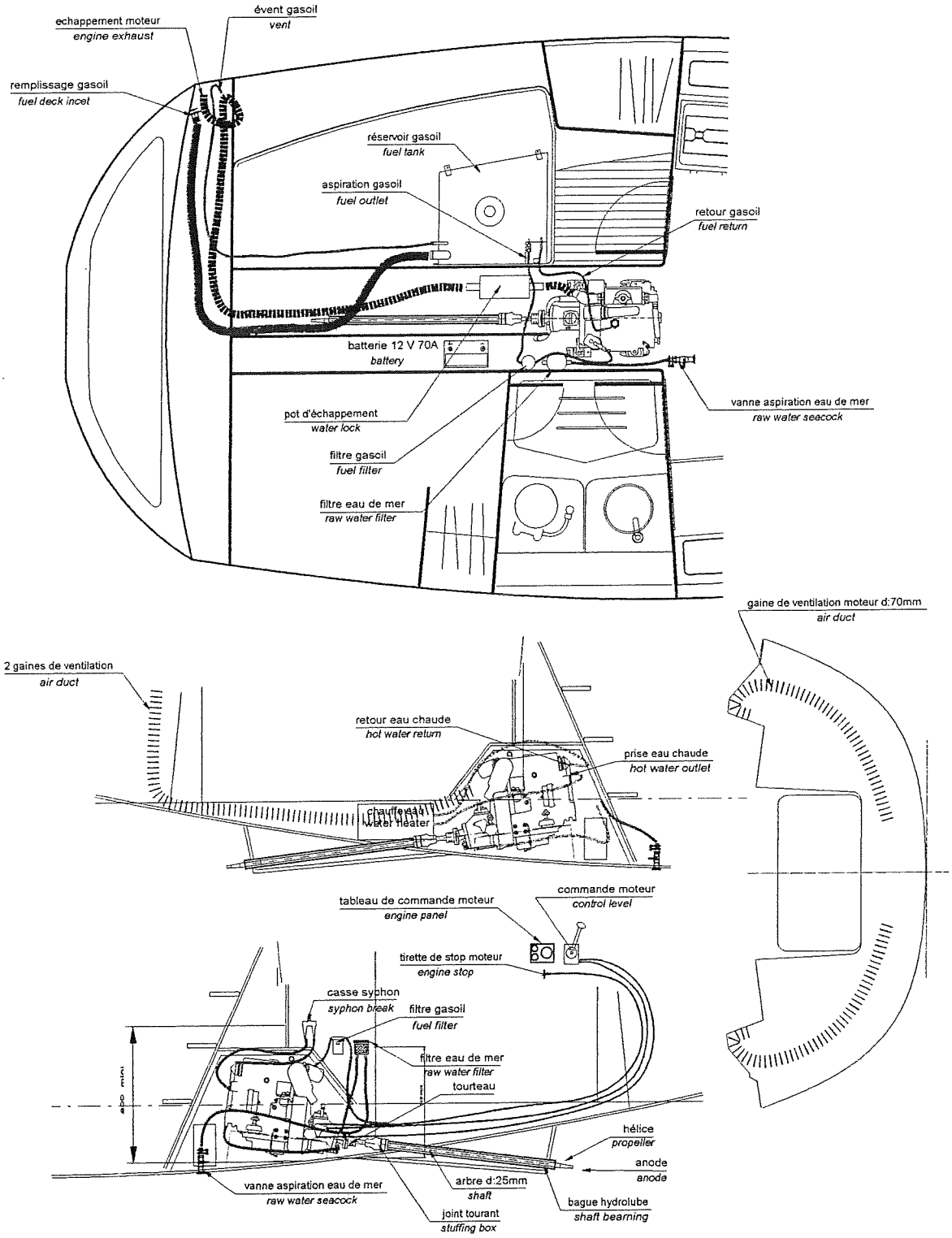

BARRE FRANCHE
STEERING SYSTEM

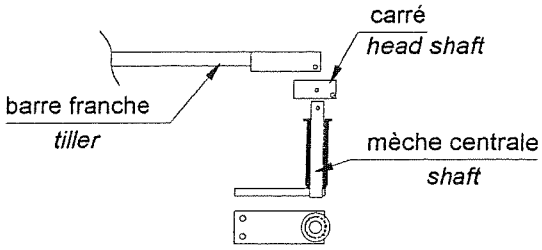

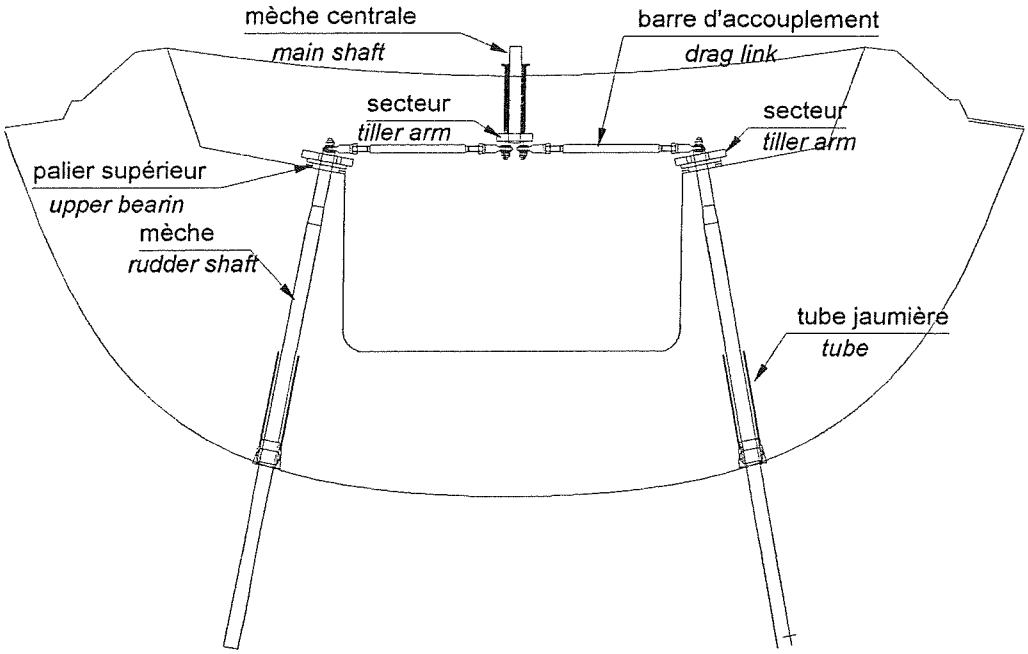

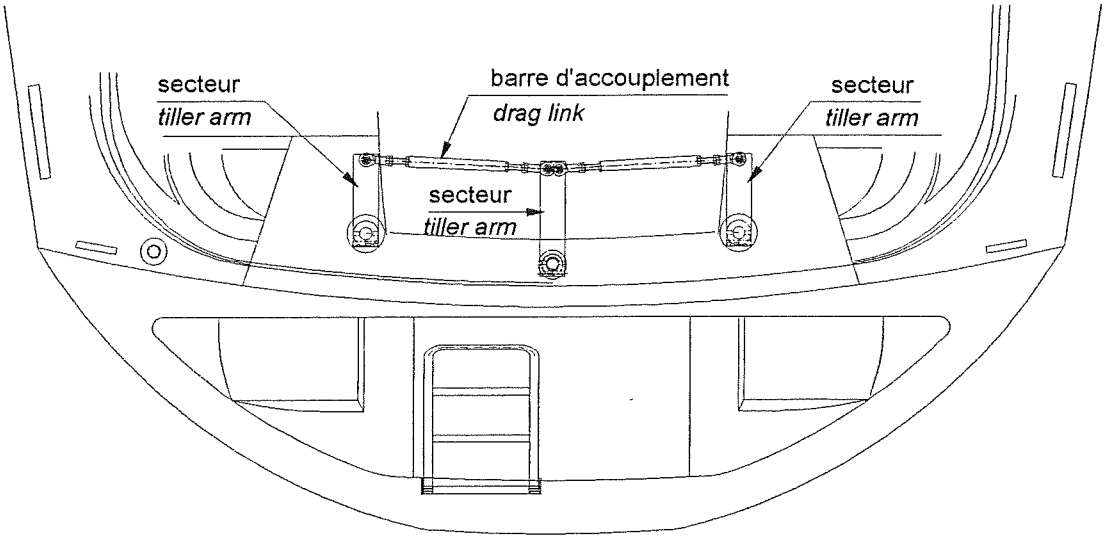

CIRCUIT GAZ
GAS SYSTEM

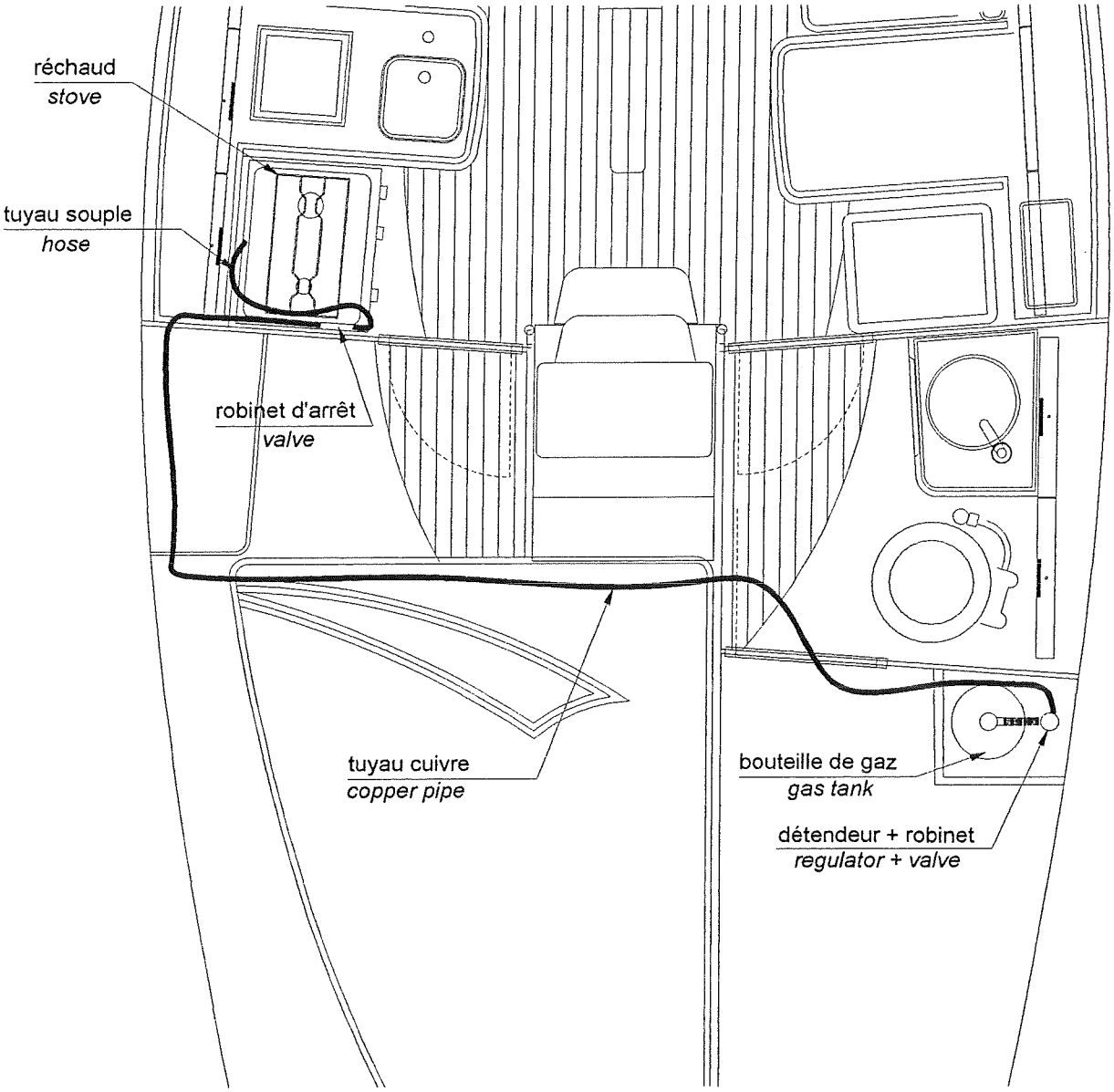

EAU DOUCE
FRESH WATER SYSTEM

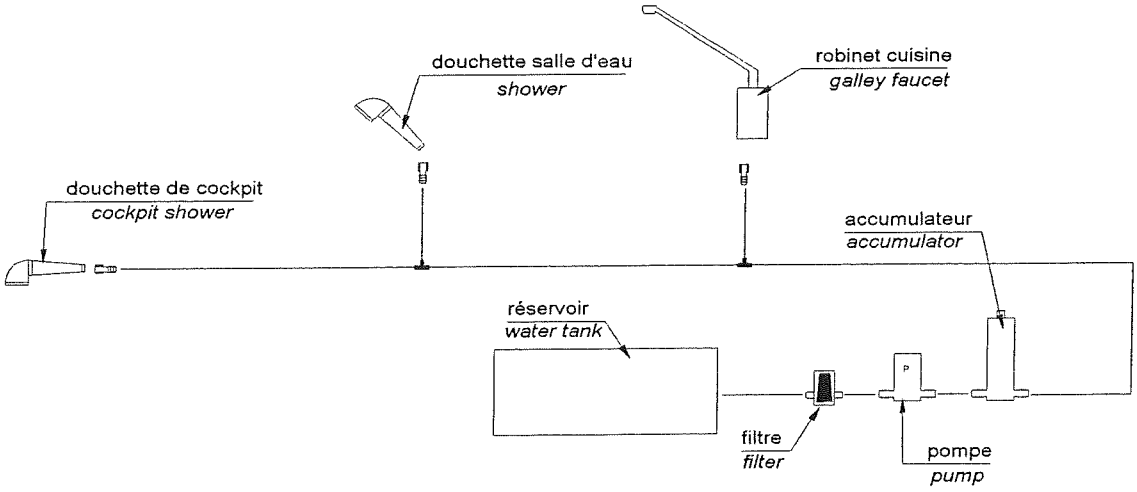

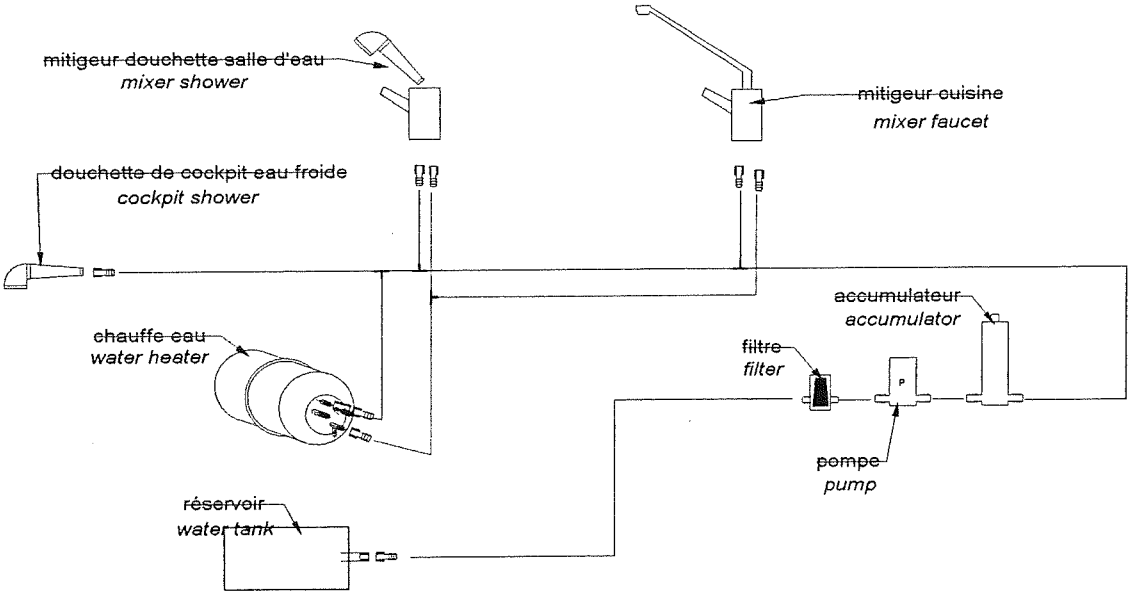

TOILETTES
TOILETS

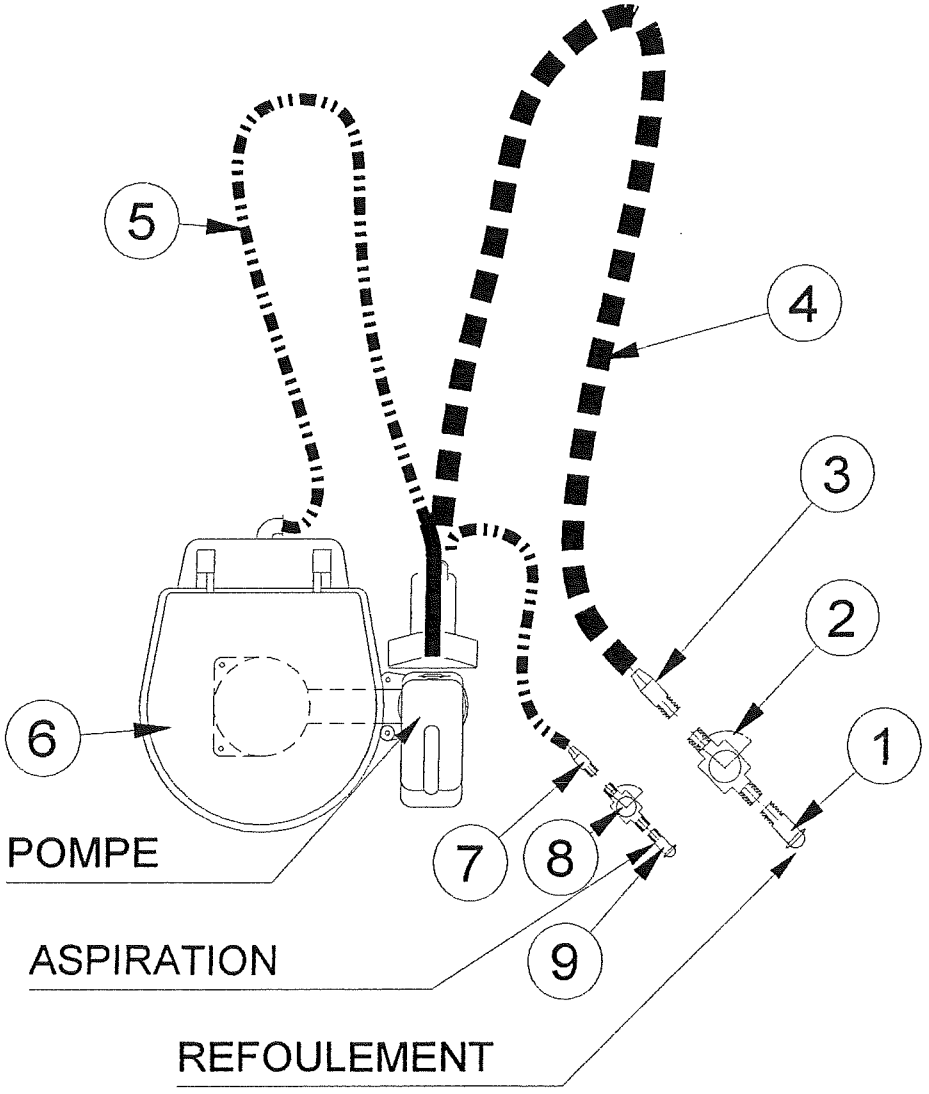

1	passe coque 1"1/4 - *thru hull fitting*
2	vanne 1/4 tour 1"1/4 - *seacock*
3	raccord annelé 1"1/4 - *hose fitting*
4	tuyau super flexible d35/38 - *hose*
5	tuyau super flexible d19 - *hose*
6	WC manuel - *manual head*
7	raccord annelé 3/4" - *hose fitting*
8	vanne 1/4 tour 3/4"- *seacock*
9	passe coque 3/4"- *thru hull fitting*

POMPE DE CALE / DOUCHE
SHOWER / SUMP PUMP

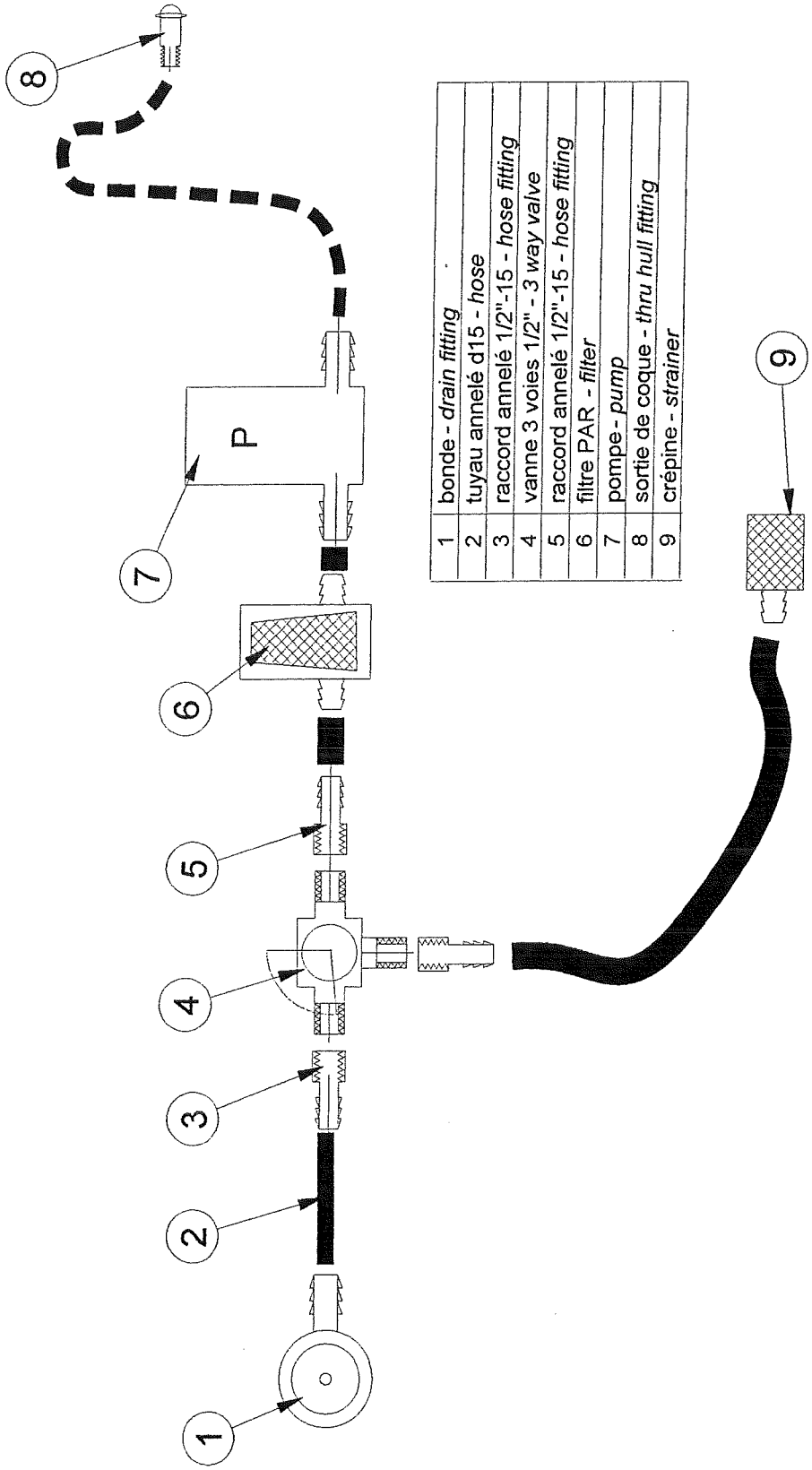

1	bonde - *drain fitting*
2	tuyau annelé d15 - *hose*
3	raccord annelé 1/2"-15 - *hose fitting*
4	vanne 3 voies 1/2" - *3 way valve*
5	raccord annelé 1/2"-15 - *hose fitting*
6	filtre PAR - *filter*
7	pompe - *pump*
8	sortie de coque - *thru hull fitting*
9	crépine - *strainer*

ASSECHEMENT
BAILING SYSTEM

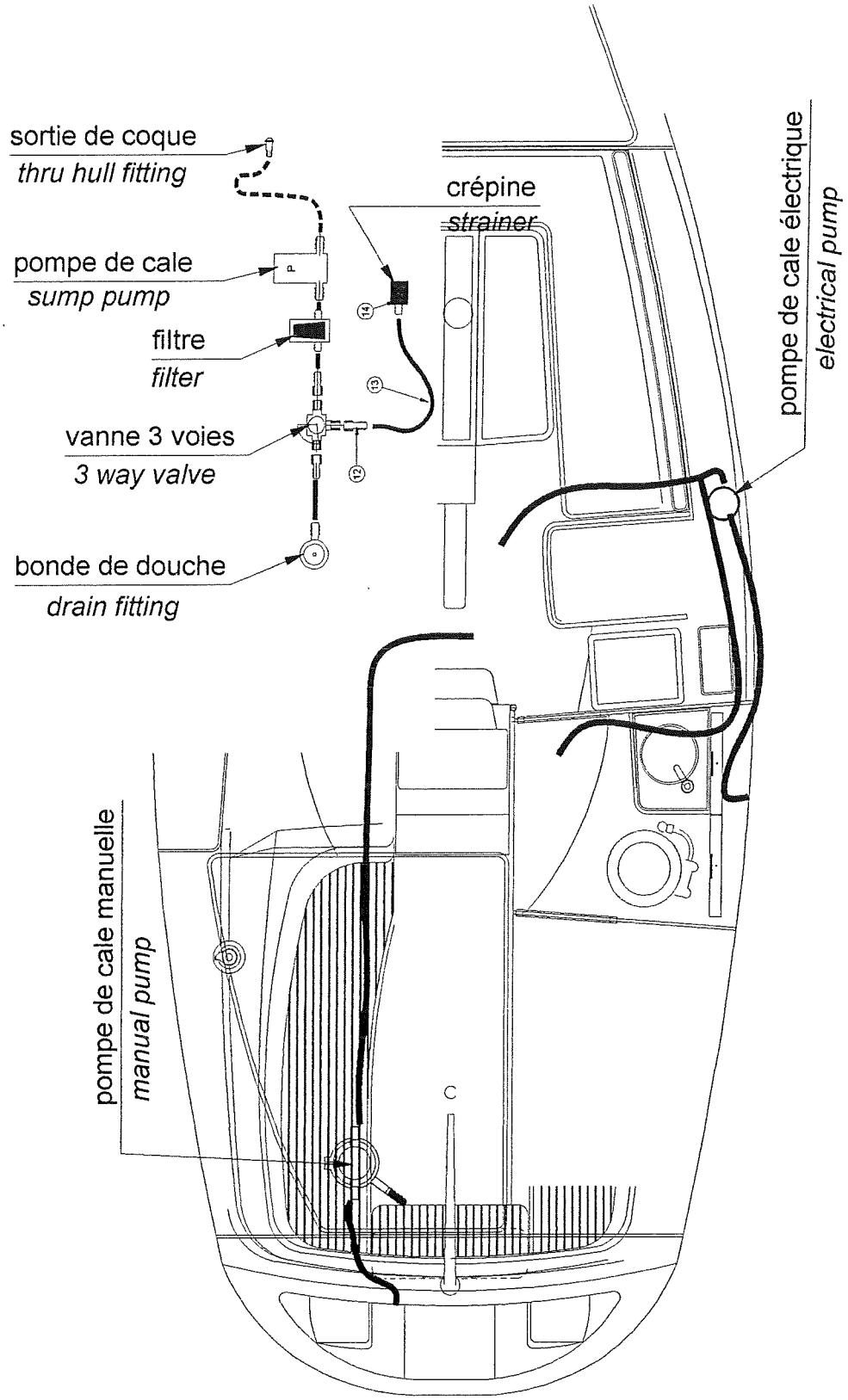

EVACUATION EVIER
SINK

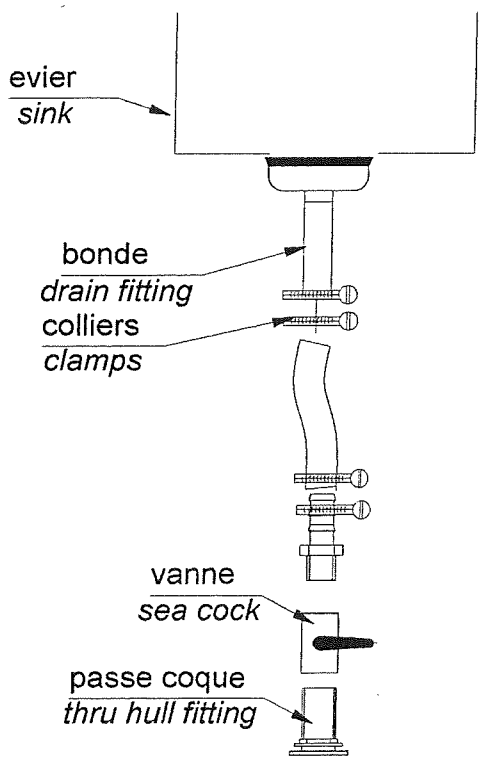

EVACUATION LAVABO
WASH BASIN

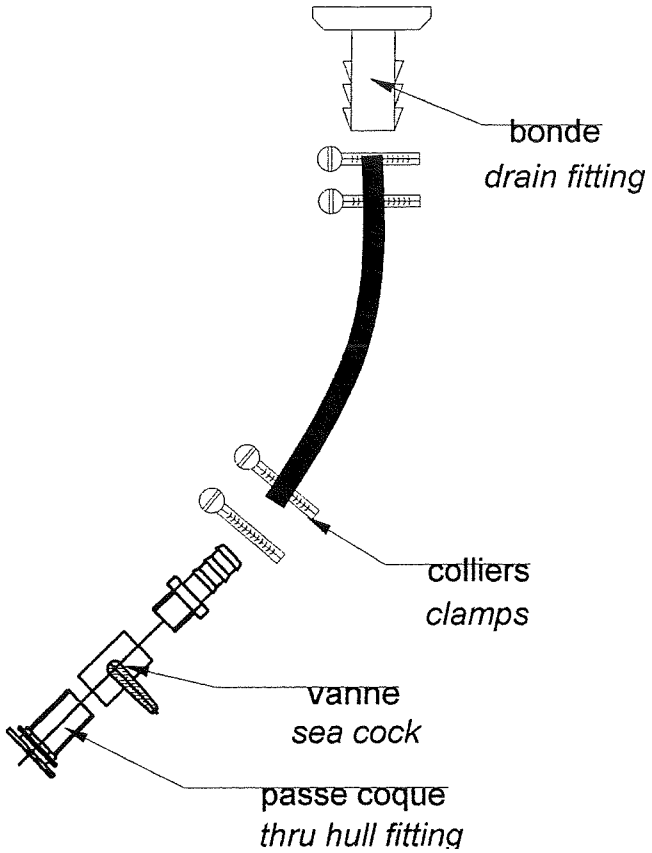

GREEMENT / VOILURE
SAIL PLAN

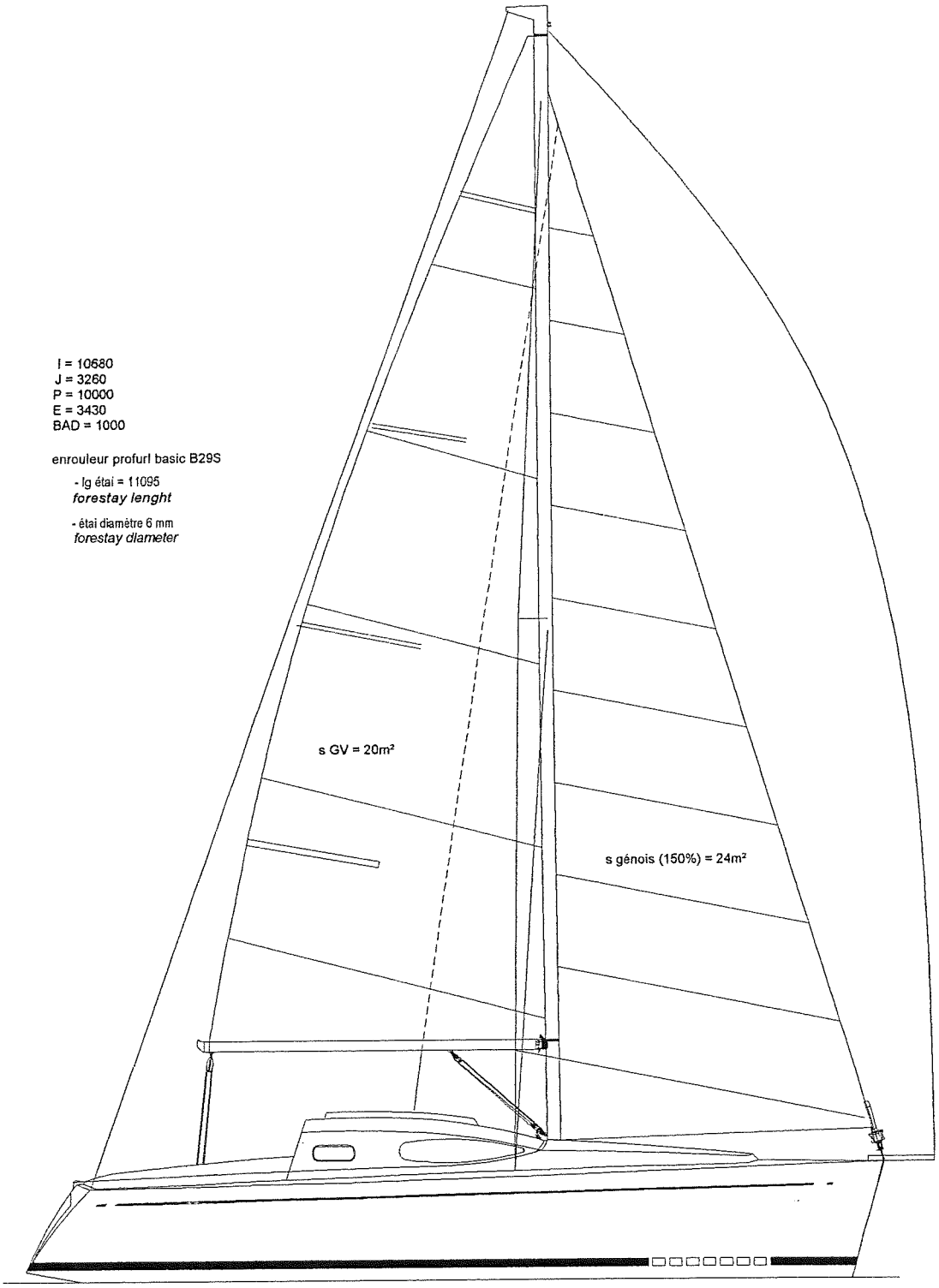

GREEMENT COURANT / ACCASTILLAGE
RUNNING RIGGING

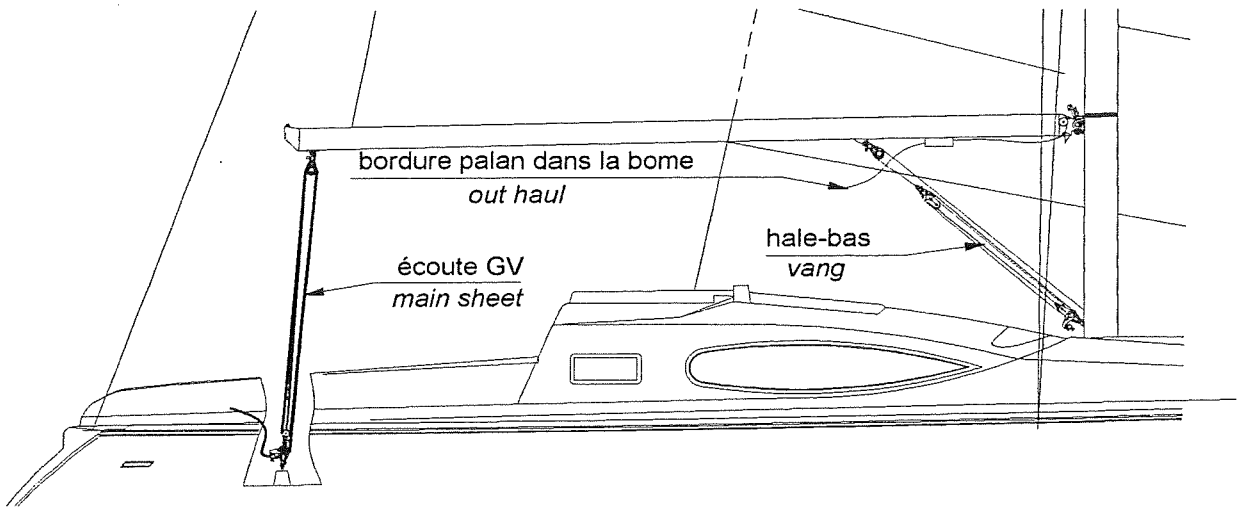

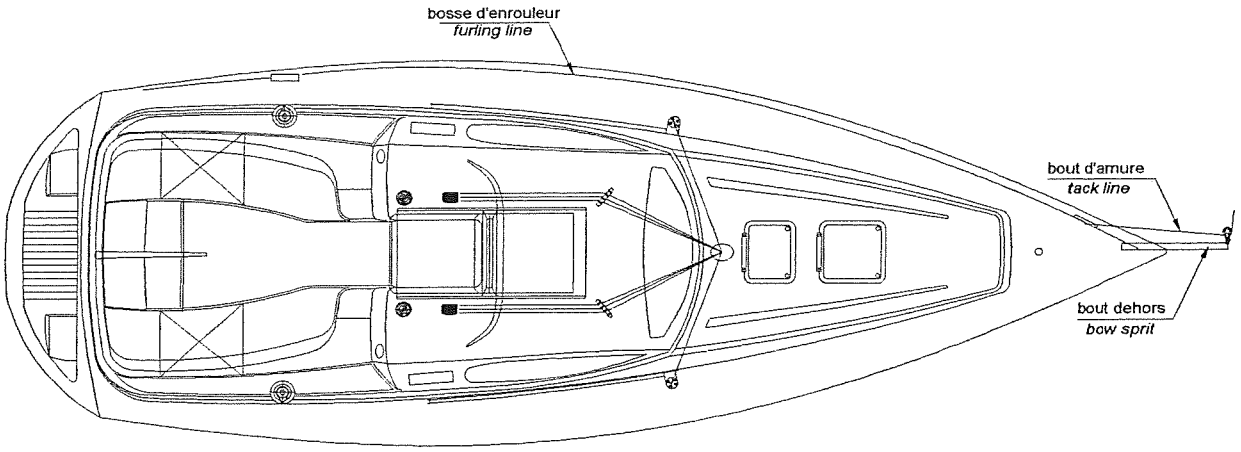

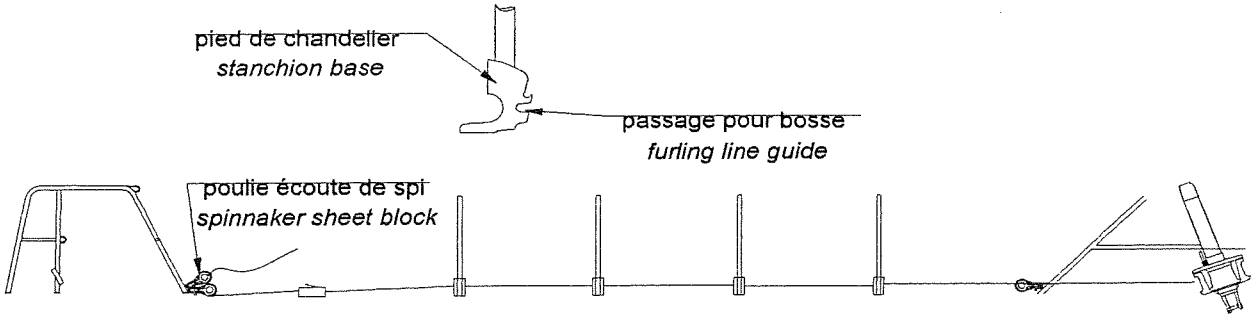

DERIVE
CENTER BOARD

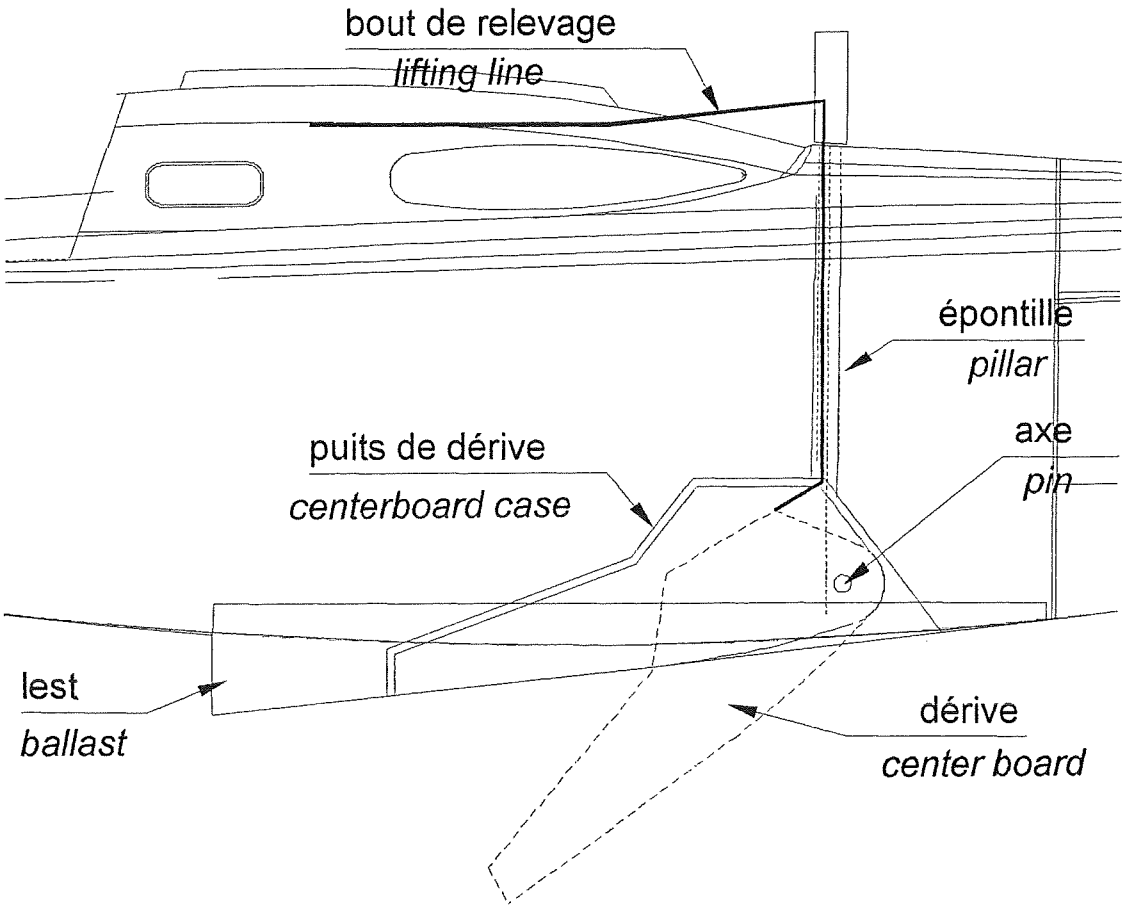

CE BATEAU EST CONCU POUR
NAVIGUER DERIVE BASSE VERROUILLEE

THIS BOAT IS ONLY INTENDED
TO BE SAILED WITH THE CENTREBOARD
LOCKED IN THE LOWEST POSITION

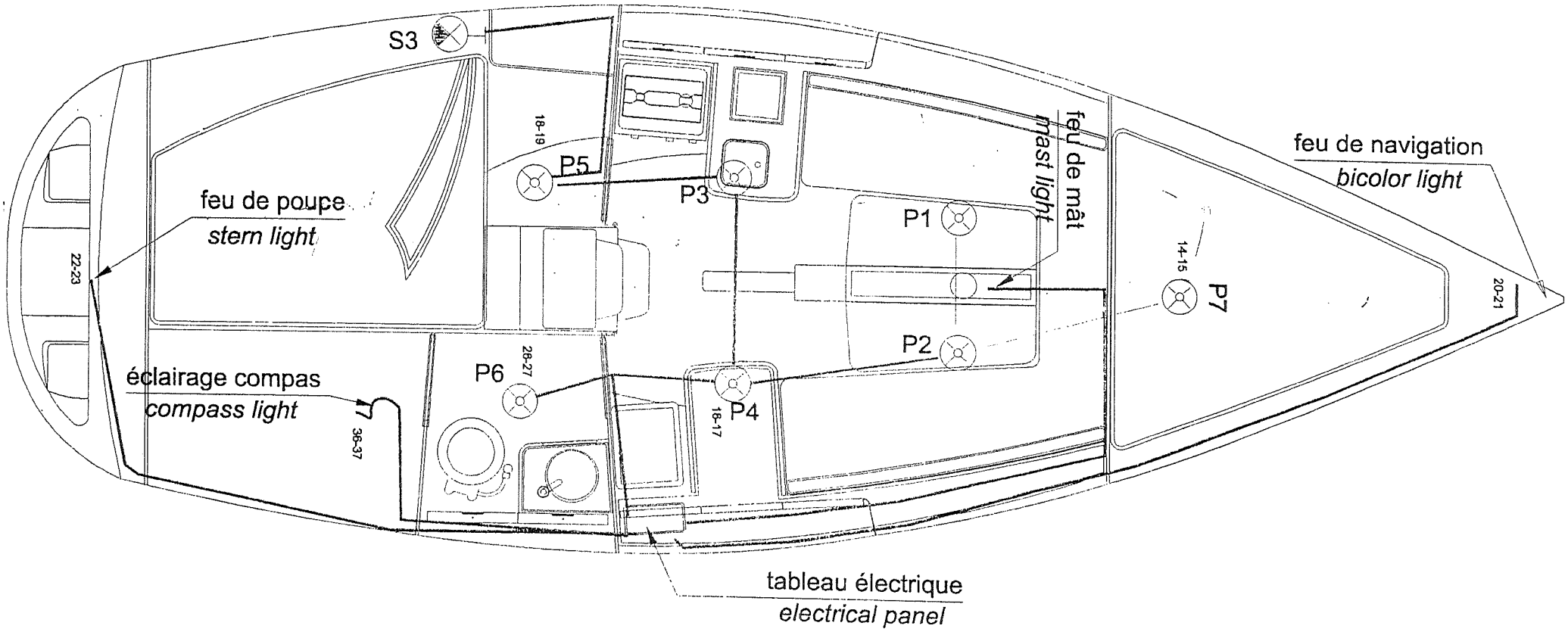
S3
18-19
P5
P3
feu de mât
mast light
P1
P2
feu de navigation
bicolor light
14-15
P7
20-21
feu de poupe
stern light
22-23
P6
26-27
P4
18-17
éclairage compas
compass light
36-37
tableau électrique
electrical panel

BORNIER FEELING 30

groupe d'eau		C1		C1	46		C1		C1	42	pompe de cale
		C1		C1	44		C1		C1	44	
feu mouillage		C2		C2	7		C2		C2	40	groupe froid
Nav électronique		C3		C3	50		C3		C3	6	feu de hune
feu de navigation	20	C4		C4	36	26	C4		C4	16	eclairage int.
		C4		C4	9		C4		C4	14	
		C4		C4	22		C4		C4	18	
		T1		T1			T1		T1	volt. Mot	

longueur faisceau bornier - tableau = 80 cm

CIRCUIT DE CHARGE STANDARD
STANDARD CHARGE WIRING

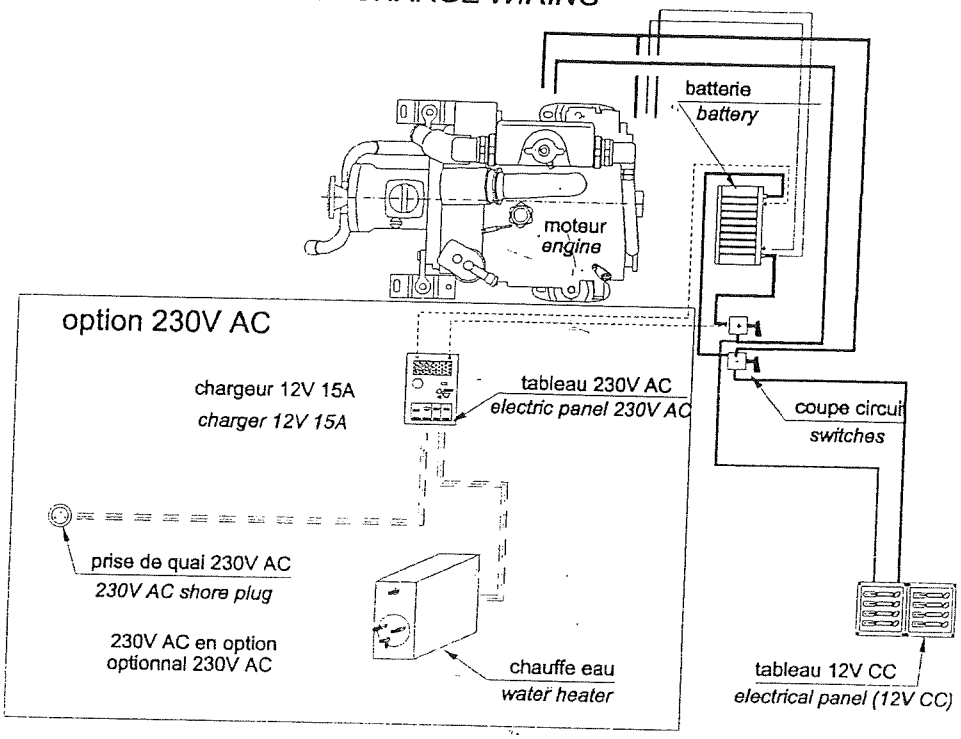

CIRCUIT DE CHARGE AVEC OPTIONS
CHARGE WIRING WITH OPTIONS

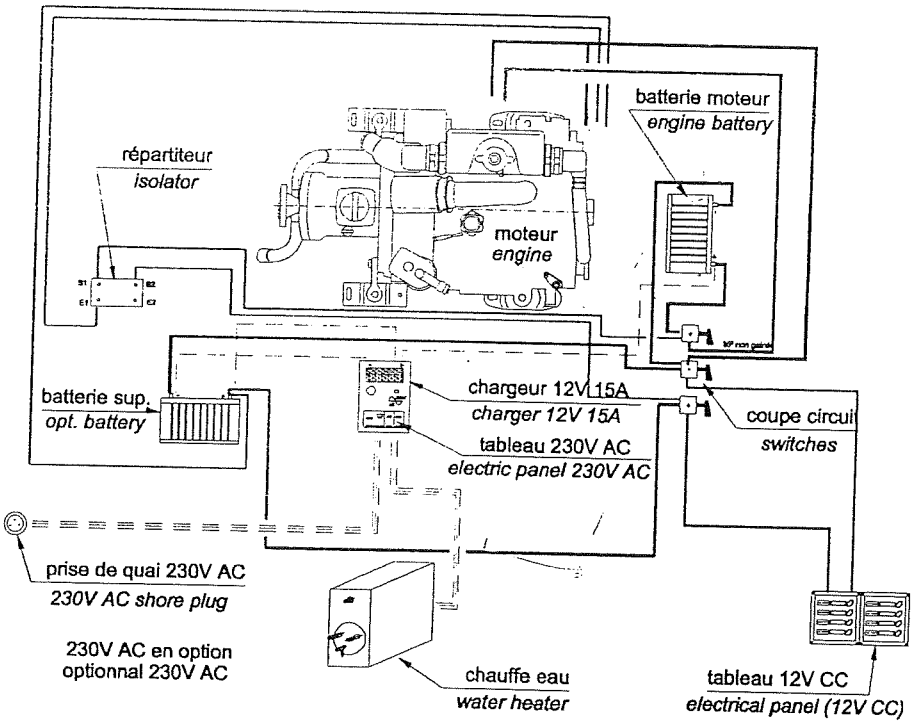

Modif.	Désignation	Date	A partir du N°
a			

K I R I E
Société nouvelle
Route de La Rochelle - BP 1839 - Le Chateau d'Olonne
85 118 LES SABLES D'OLONNE
Tel: 02 51 21 18 83 Fax: 02 51 21 55 49

CIRCUITS DE CHARGE

Plan N°: F30 E 01

Bateau: F30

Ech. :

Fait par: Marc CHOPIN

Version: XXXX

Date: 15/3/00

Code: XXXX

Remarques: XXXX